pher83-70469-a-a5

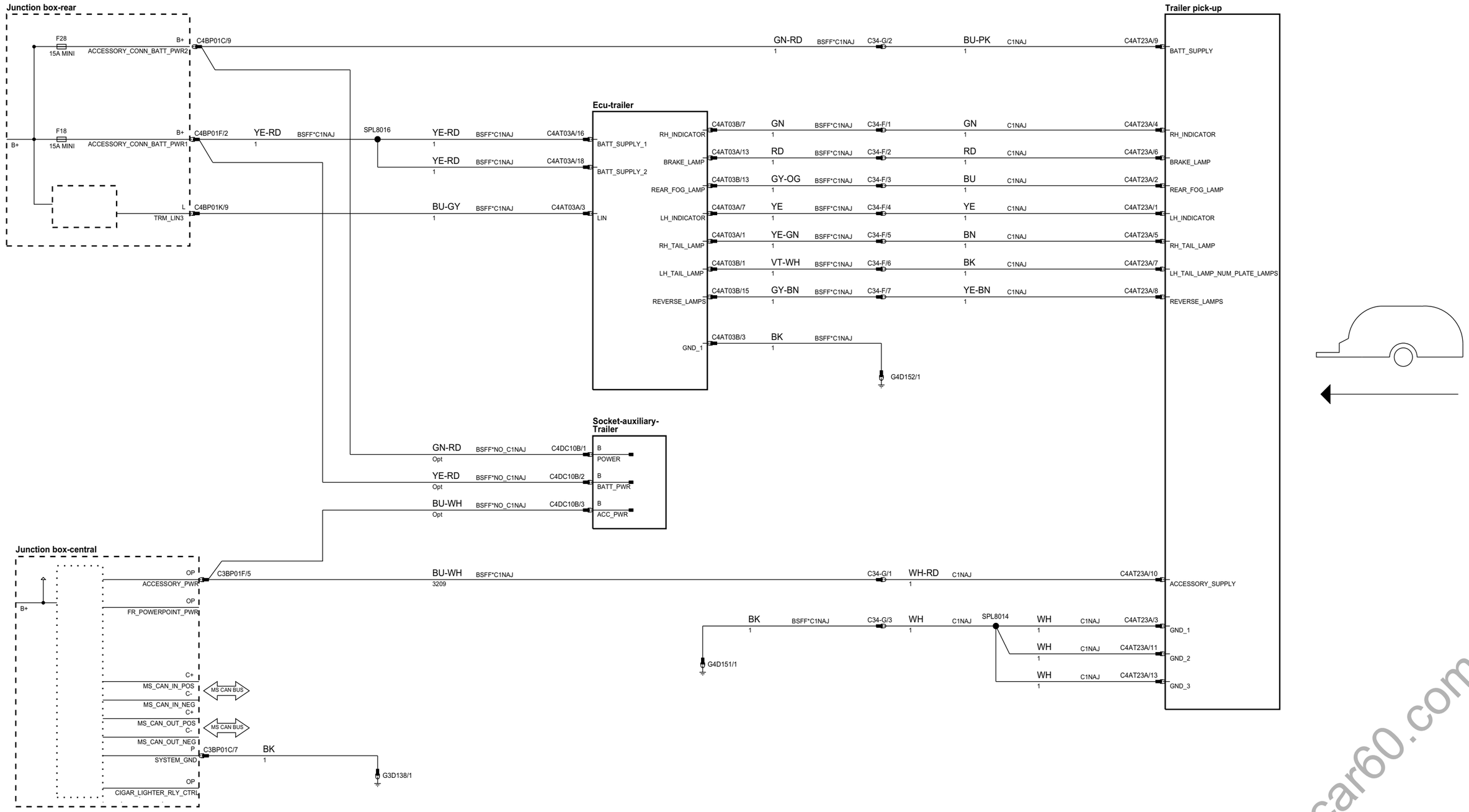

www.car60.com